Centre Number	Candidate Number	Name

UNIVERSITY OF CAMBRIDGE INTERNATIONAL EXAMINATIONS
International General Certificate of Secondary Education

PHYSICS **0625/02**

Paper 2 Core

October/November 2005

1 hour 15 minutes

Candidates answer on the Question Paper.
No Additional Materials are required.

READ THESE INSTRUCTIONS FIRST

Write your Centre number, candidate number and name on all the work you hand in.
Write in dark blue or black pen in the spaces provided on the Question Paper.
You may use a soft pencil for any diagrams, graphs or rough working.
Do not use staples, paper clips, highlighters, glue or correction fluid.

Answer **all** questions.
At the end of the examination, fasten all your work securely together.
The number of marks is given in brackets [ ] at the end of each question or part question.
You may lose marks if you do not show your working or if you do not use appropriate units.
Take the weight of 1 kg to be 10 N (i.e. acceleration of free fall = 10 m/s^2).

If you have been given a label, look at the details. If any details are incorrect or missing, please fill in your correct details in the space given at the top of this page.

Stick your personal label here, if provided.

For Examiner's Use

This document consists of **15** printed pages and **1** blank page.

MML 8113 3/04 S80925/2
© UCLES 2005
UNIVERSITY of CAMBRIDGE International Examinations
[Turn over
www.root19.com +91 - 9969 353 391

For Examiner's Use

1 The length of a spring is measured when various loads from 1.0 N to 6.0 N are hanging from it. Fig. 1.1 gives a graph of the results.

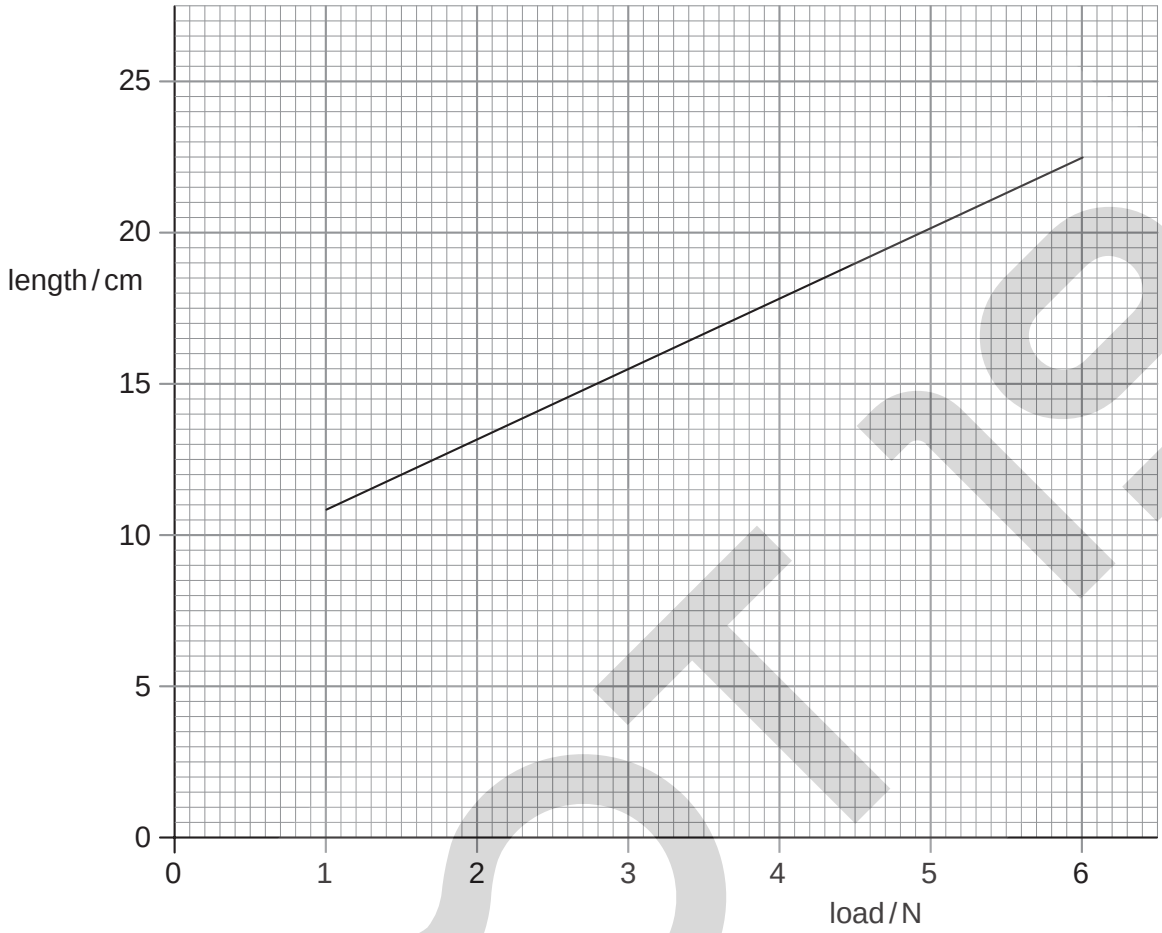

Fig. 1.1

Use the graph to find

(a) the length of the spring with no load attached,

length = ... cm [1]

(b) the length of the spring with 4.5 N attached,

length = ... cm [1]

(c) the extension caused by a 4.5 N load.

extension = ... cm [2]

© UCLES 2005
www.foot19.com

+91 - 9969 353 391

2 Palm trees are growing every 25 m alongside the highway in a holiday resort.

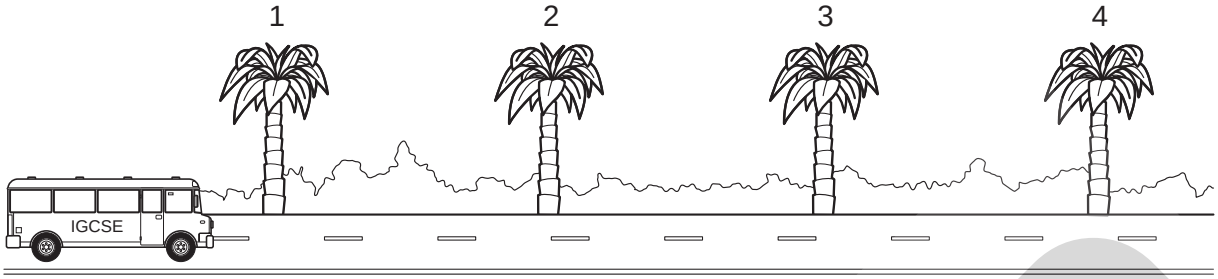

Fig. 2.1

The IGCSE school bus drives along the highway.

(a) It takes 2 s for the bus to travel between palm tree 1 and palm tree 2.

Calculate the average speed of the bus between tree 1 and tree 2.

average speed = ... [4]

(b) It takes more than 2 s for the bus to travel from tree 2 to tree 3.

State what this information indicates about the speed of the bus.

..... [1]

(c) The speed of the bus continues to do what you have said in **(b)**. State how the time taken to go from tree 3 to tree 4 compares with the time in **(b)**.

The time taken to travel from tree 3 to tree 4 is ..... the time to travel from tree 2 to tree 3. [1]

© UCLES 2005
www.root19.com

+91 - 9969 353 091

3 **(a)** Fig. 3.1 shows two examples of footwear being worn by people of equal weight at a Winter Olympics competition.

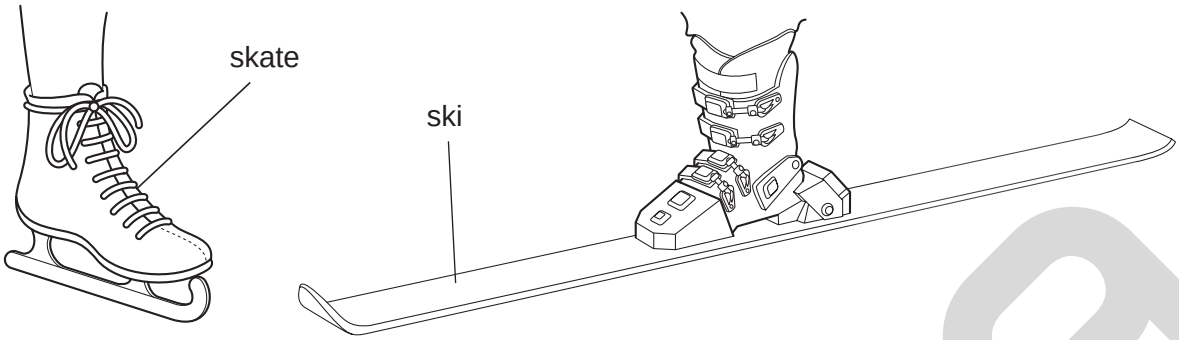

Fig. 3.1

Which footwear creates the greatest pressure below it, and why?

Which? .....

Why? ..... [2]

(b) Drivers of high-sided vehicles, like the one in Fig. 3.2, are sometimes warned not to drive when it is very windy.

Fig. 3.2

Suggest why they receive this warning.

.....

.....

..... [2]

© UCLES 2005
www.foot19.com

+91 - 9969 353 391

For Examiner's Use

4 A man is delivering a cupboard to a house.

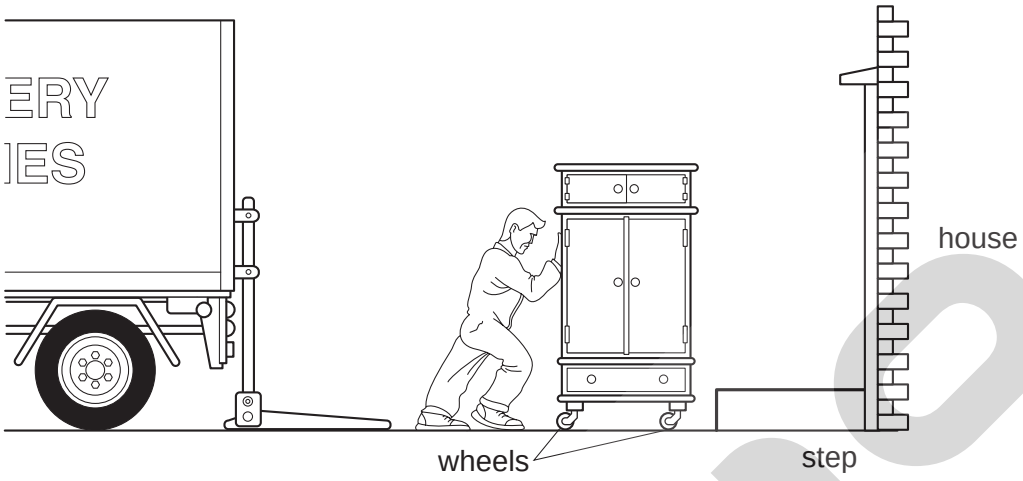

Fig. 4.1

(a) The man rolls the cupboard at a steady speed from the lorry to the house. The friction force in the wheels is 40 N. State the force with which the man has to push.

force = ... N [1]

(b) The cupboard weighs 720 N. State the smallest force needed to lift the cupboard.

force = ... N [1]

(c) The step is 0.20 m high. Calculate the work required to lift the cupboard onto the step.

work required = ... [4]

(d) The man has to ask his assistant to help him lift the cupboard onto the step. Together, they lift it onto the step in 1.2 s. The men work equally hard.

Calculate the power developed by each man.

power developed = ... [4]

© UCLES 2005
www.root19.com

+91 - 9969 353 091

5 The apparatus shown in Fig. 5.1 is set up in a laboratory during a morning science lesson.

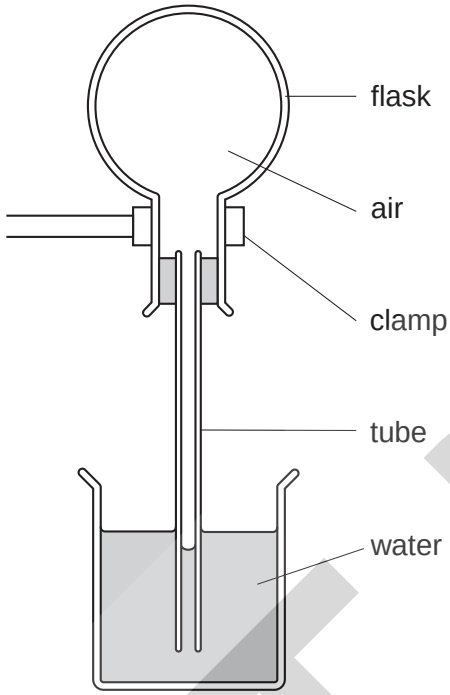

Fig. 5.1

Later in the day, the room temperature is higher than in the morning.

(a) What change is observed in the apparatus?

..... [1]

(b) Explain why this change happens.

..... [1]

(c) Suggest one disadvantage of using this apparatus to measure temperature.

..... [1]

© UCLES 2005
www.foot19.com

+91 - 9969 353 391

For Examiner's Use

6 Fig. 6.1 shows a reed relay being used to switch on an electric motor when a variable resistor is adjusted.

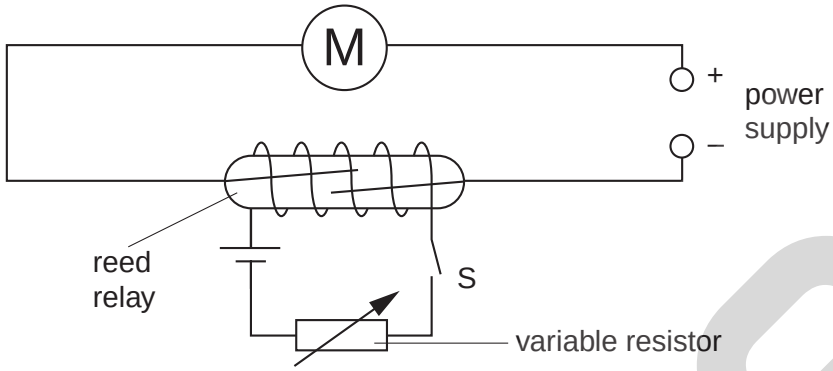

Fig. 6.1

(a) The variable resistor is set at its greatest resistance and then switch S is closed. The reeds in the reed relay do **not** close when this is done.

(i) State two things that happen in the coil of the reed relay.

1. .....

2. ..... [2]

(ii) State what happens to the two reeds in the reed relay.

..... [1]

(b) The resistance of the variable resistor is slowly decreased. The reeds in the reed relay close. Fig. 6.2(a) shows how the current in the coil changes with time.

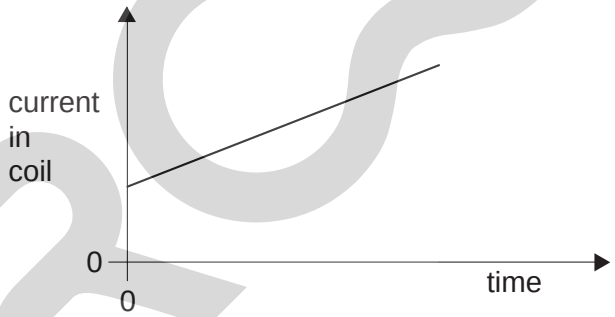

Fig. 6.2(a)

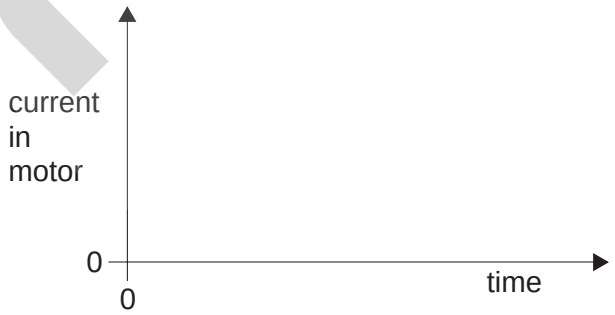

Fig. 6.2(b)

On Fig. 6.2(b), draw a line that might show how the current in the motor changes with time as the variable resistor is adjusted. [4]

© UCLES 2005
www.root19.com

+91 - 9969 353 991

7 **(a)** The filament of a lamp is placed at the principal focus of a lens, as shown in Fig. 7.1.

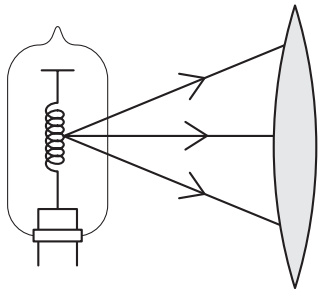

Fig. 7.1

On Fig. 7.1, continue the three rays through the lens and out into the air on the right of the lens. [1]

(b) The lens in Fig. 7.2 has a focal length of 2.0 cm.

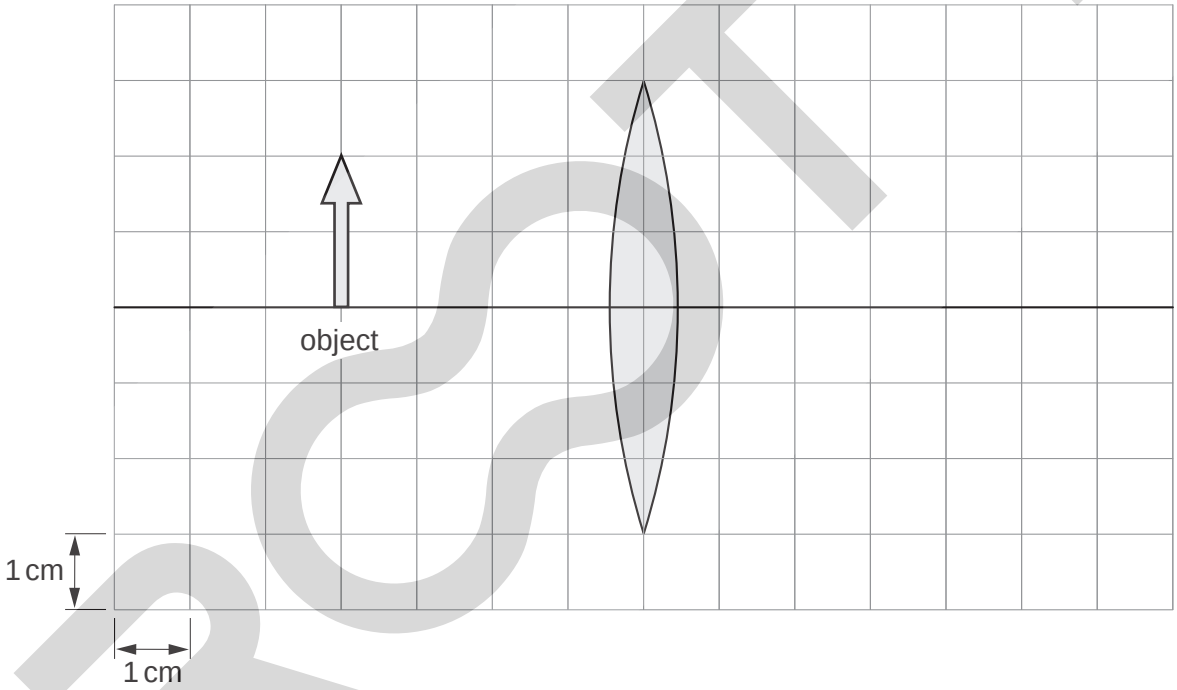

Fig. 7.2

On Fig. 7.2,

(i) mark and label the positions of the principal focus on the left of the lens and the principal focus on the right of the lens, [1]

(ii) carefully draw a ray from the top of the object, parallel to the axis, through the lens and continue it until it reaches the edge of the squared area, [1]

(iii) carefully draw a ray from the top of the object, which travels parallel to the axis **after** it has passed through the lens, [1]

(iv) draw and label the image. [2]

© UCLES 2005
www.foot19.com

+91 - 9969 353 391

8 **(a)** Two magnets are laid on a bench. End A of an unidentified rod is held in turn above one end of each magnet, with the results shown in Fig. 8.1.

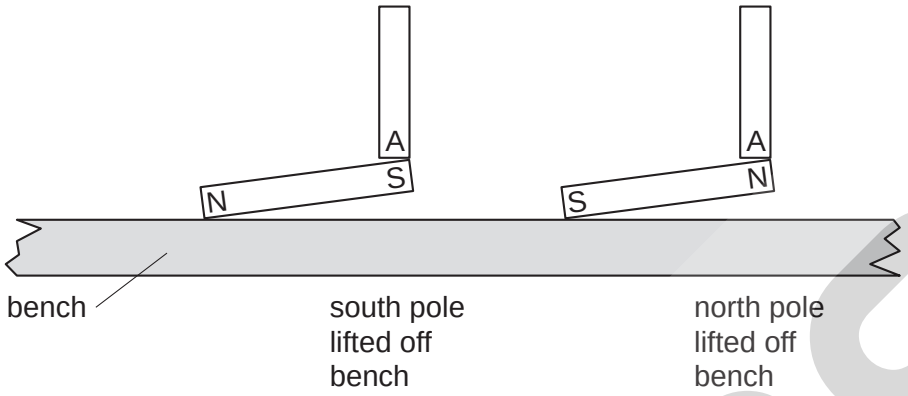

Fig. 8.1

(i) Suggest what the unidentified rod is made from.

..... [1]

(ii) State what, if anything, happens when the end A is held over one end of

1. an unmagnetised iron bar, ...

2. an uncharged plastic rod. ..... [2]

(b) Fig. 8.2 shows four identical plotting compasses placed around a bar magnet where the magnetic field of the surroundings can be ignored. The pointer has only been drawn on one plotting compass.

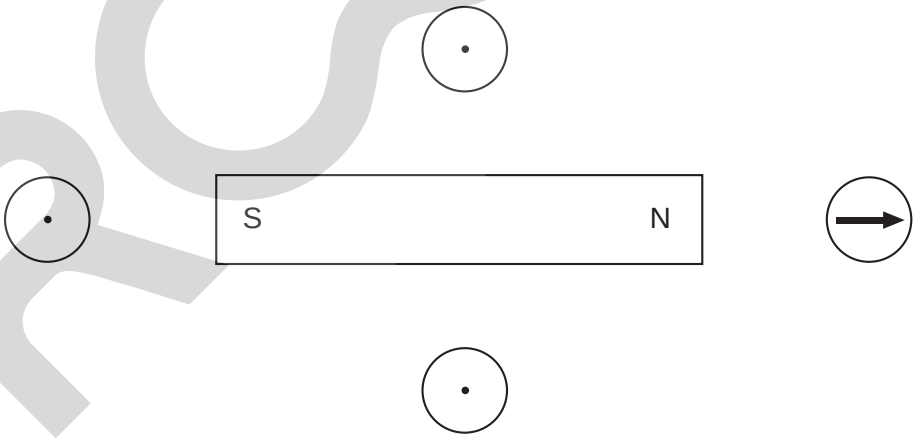

Fig. 8.2

On Fig. 8.2, draw the pointers on the other three plotting compasses to indicate the directions of the magnetic field of the bar magnet in those three places. [3]

© UCLES 2005
www.root19.com

+91 - 9969 353 091

For Examiner's Use

9 **(a)** Fig. 9.1 shows five circuit symbols and their names. The names are in the wrong order.

Draw a straight line from each symbol to its name. One line has been drawn as an example.

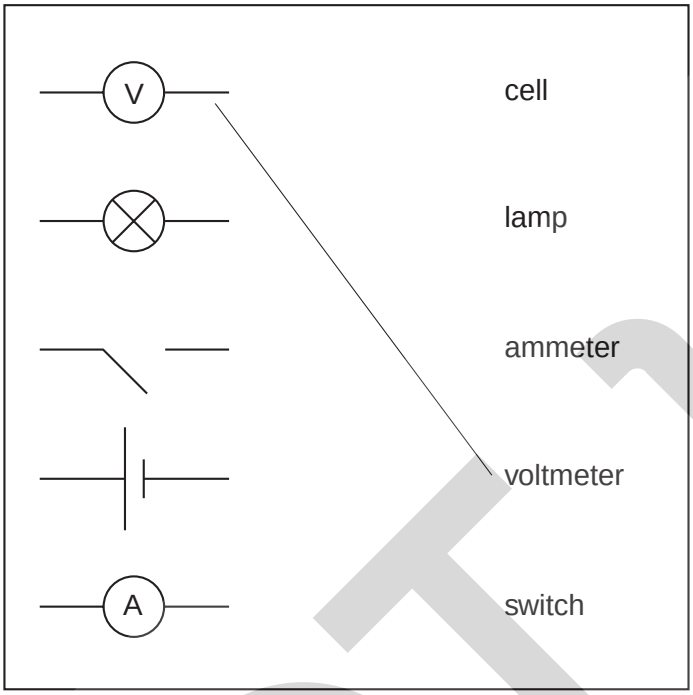

Fig. 9.1

[3]

(b) Fig. 9.2 shows a circuit.

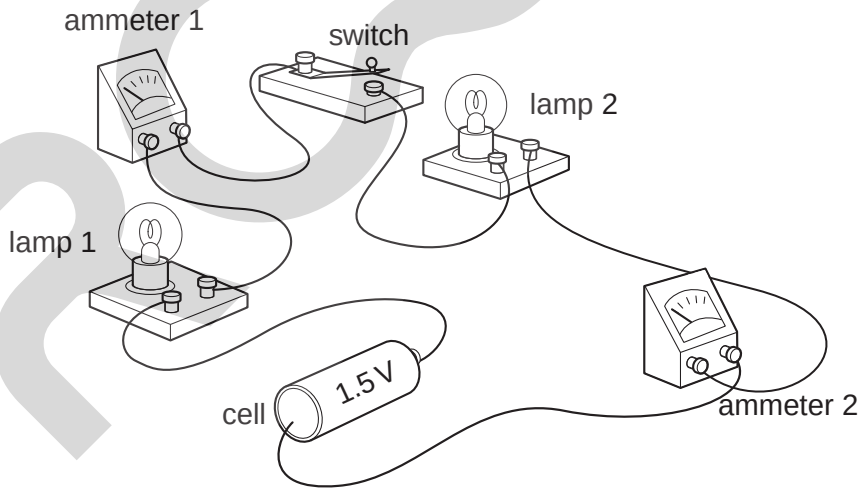

Fig. 9.2

© UCLES 2005
www.foot19.com

+91 - 9969 353 391

(i) In the space below, draw the circuit using circuit symbols. [1]

(ii) On your diagram in **(b)(i)**, add a voltmeter connected to measure the potential difference across the cell. [1]

(iii) When the switch is pressed so that the contacts join, which of the lamps light up?

..... [1]

(iv) When there is a current in the circuit, ammeter 1 reads 0.5 A.

What current does ammeter 2 read?

current = ... A [1]

(v) One lamp "blows", so that its filament breaks.

What happens in the circuit?

.....

..... [1]

© UCLES 2005
www.root19.com

+91 - 9969 353 091

10 Some fat purchased from a shop is supplied as the block shown in Fig. 10.1.

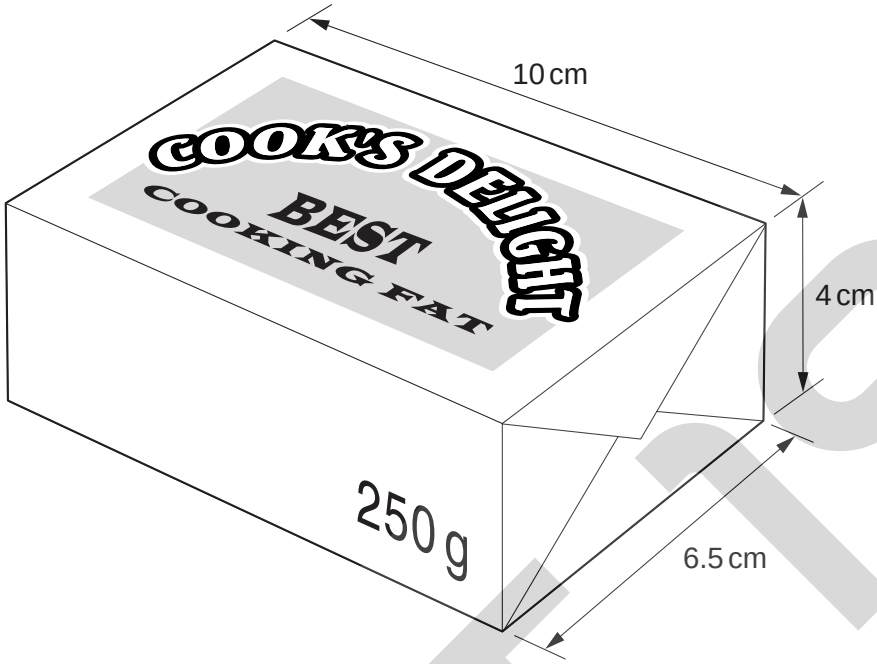

Fig. 10.1

Use the information in Fig. 10.1 to calculate

(a) the volume of the block,

volume = ... cm^3 [2]

(b) the density of the fat. Give your answer to 2 significant figures.

density = ... [5]

© UCLES 2005
www.foot19.com

+91 - 9969 353 391

For Examiner's Use

11 Fig. 11.1 shows a tube for producing cathode rays. The tube contains various parts.

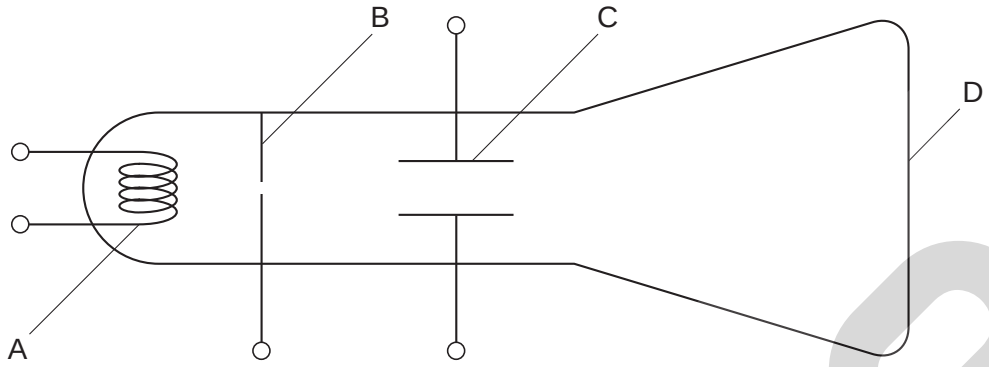

Fig. 11.1

A spot is formed on the screen by the cathode rays.

(a) What do cathode rays consist of? ..... [1]

(b) Which part, A, B, C or D, must be heated to create the cathode rays? ..... [1]

(c) **(i)** Which part, A, B, C or D, is coated with fluorescent material? ..... [1]

(ii) What is the purpose of the fluorescent material?

..... [1]

(d) A potential difference is applied between the two halves of part C.

What effect does this have on the cathode rays?

..... [1]

(e) Explain why there needs to be a vacuum inside the tube.

.....

.....

..... [2]

© UCLES 2005
www.root19.com

+91 - 9969 353 091

12 **(a)** State what is meant by

(i) the *half-life* of a radioactive substance,

.....

..... [3]

(ii) *background radiation*.

.....

..... [1]

(b) In a certain laboratory, the background radiation level is 25 counts/minute.

Fig. 12.1 is a graph of the count-rate measured by a detector placed a short distance from a radioactive source in the laboratory.

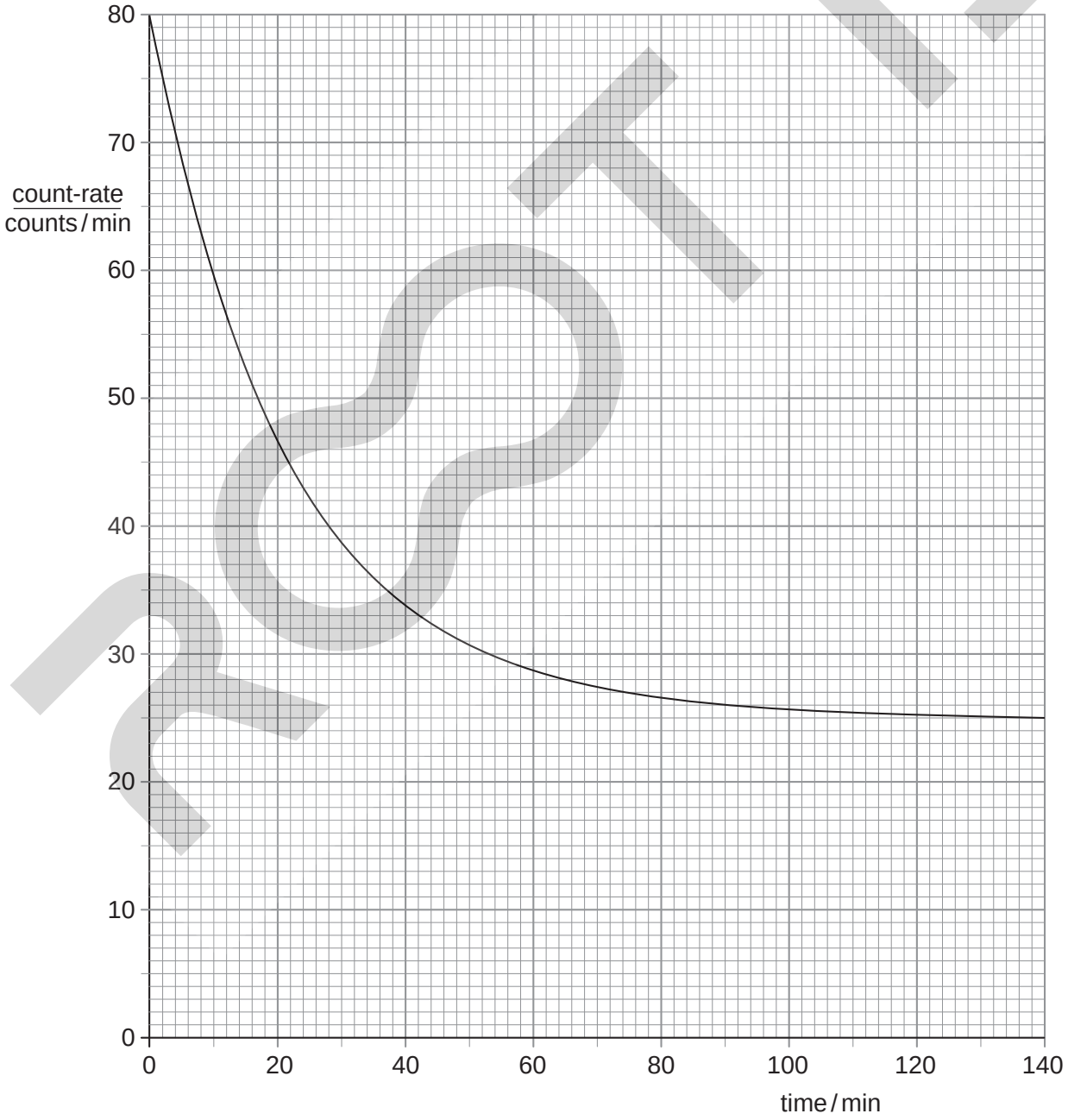

Fig. 12.1

© UCLES 2005
www.foot19.com

+91 - 9969 353 391

(i) At zero time, the measured count-rate of the source and background together is 80 counts/minute.

Calculate the count-rate due to the source alone.

count-rate due to source = ... counts/min [2]

(ii) After one half-life has elapsed, what is the count-rate

1. due to the source alone,

count-rate due to source = ... counts/min

2. measured by the detector?

count-rate measured by detector = ... counts/min

[2]

(iii) Use the graph to find the half-life of the source.

half-life of source = ... min [1]

(iv) Why does the graph **not** drop below the 25 counts/minute line?

.....

..... [1]

(v) On Fig. 12.1, sketch the curve that might be obtained for a source with a shorter half-life. [2]

© UCLES 2005
www.root19.com

+91 - 9969 353 391

BLANK PAGE

Permission to reproduce items where third-party owned material protected by copyright is included has been sought and cleared where possible. Every reasonable effort has been made by the publisher (UCLES) to trace copyright holders, but if any items requiring clearance have unwittingly been included, the publisher will be pleased to make amends at the earliest possible opportunity.

University of Cambridge International Examinations is part of the University of Cambridge Local Examinations Syndicate (UCLES), which is itself a department of the University of Cambridge.